SAILOR Mast Mount Kit

for FleetOne & FleetBroadband

UNIVERSAT ITALIA SERVICES
GLOBAL SATELLITE COMMUNICATIONS

Universat Italia Services Srl
Viale Luca Gaurico, 9/11 (2rd floor) – 00143 Roma – Italy - C.F./P.Iva 10191231009
Tel.: +39 06 5814292 - Fax: +39 06 54834000 – info@universatitalia.it – www.universatitalia.it

REVISIONS			
LTR	DESCRIPTION	DATE	APPROVAL
A	ORIGINAL		
B	New Mounting Kit (Note B)	08.02.2008	OBL

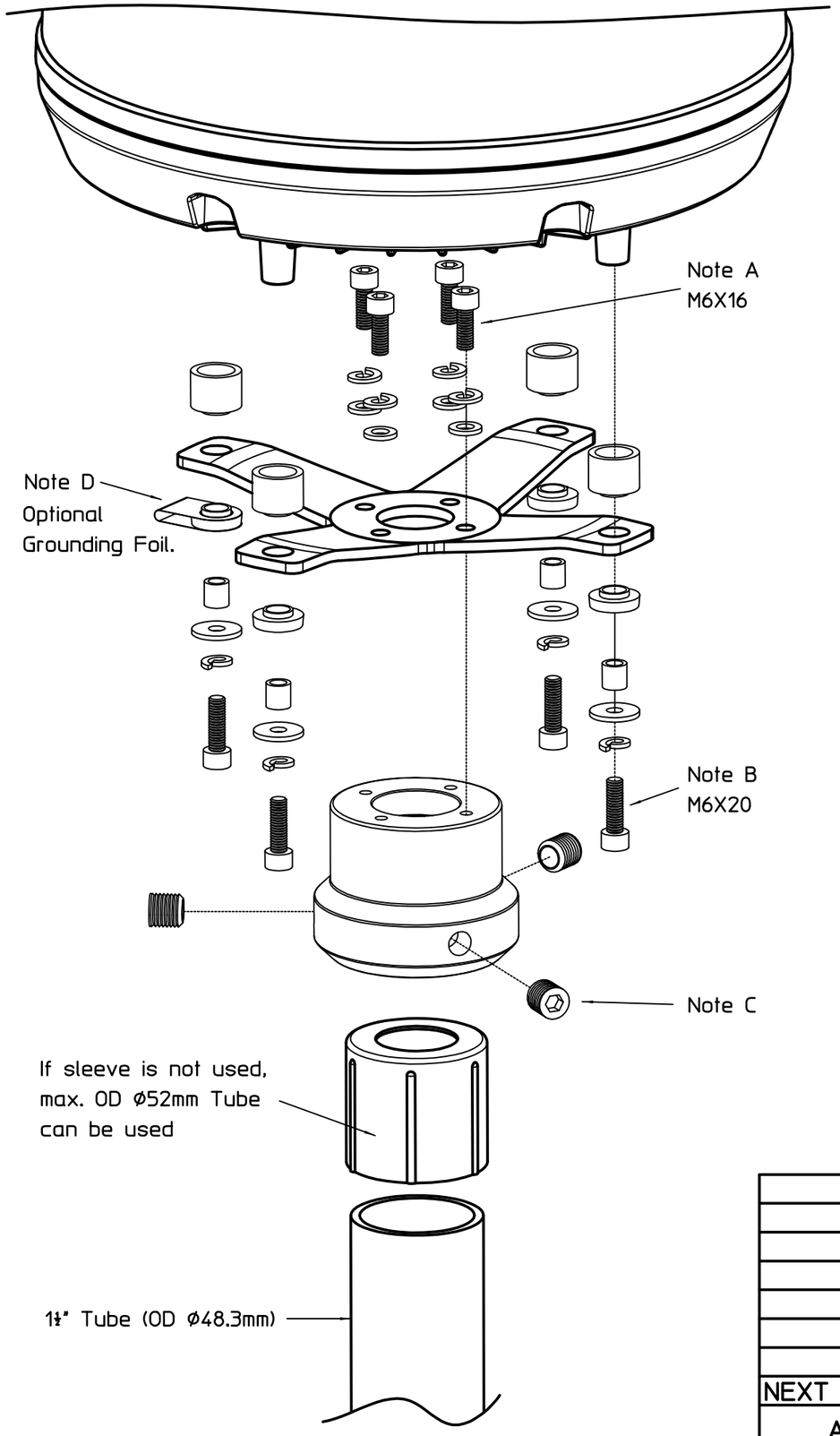

Note D:
Bending of the Grounding Foil.
Diameter of tool approx. ø 4mm.

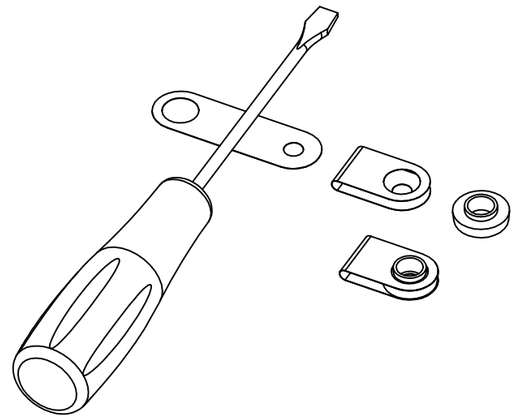

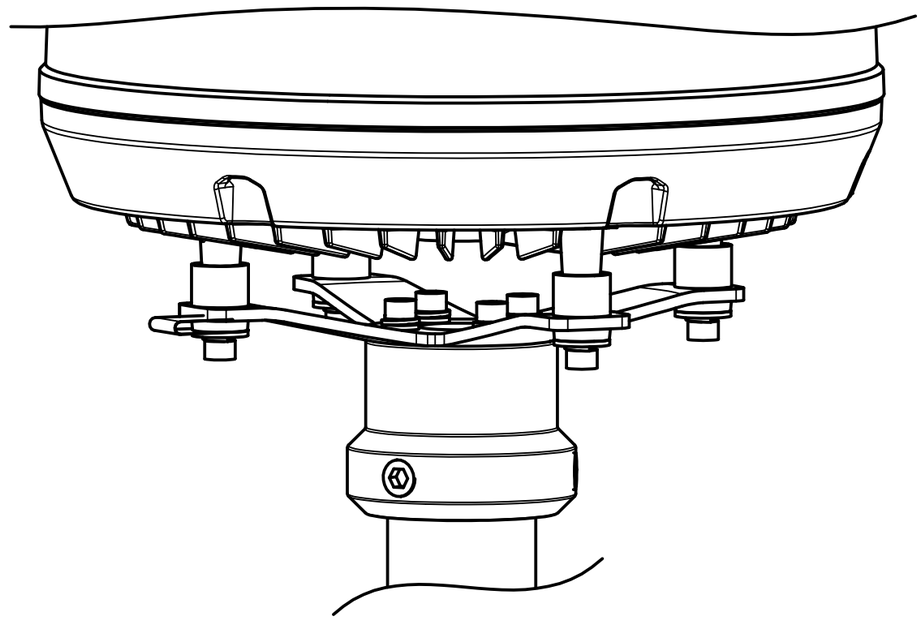

Note A:
Recommended torque: 8 Nm

Note B:
Recommended torque: 8 Nm

Note C:
Recommended torque: 30 Nm

Do not exceed recommended torque.

	TT-3050A
NEXT ASSY	USED ON
APPLICATION	

UNLESS OTHERWISE SPECIFIED DIMENSIONS ARE IN MILLIMETRES AND TOLERANCES ARE IN ACCORDANCE WITH DS/ISO 2768-1 F

ANGLES
LIN. DIM.

MATERIAL

DR.	Ole Brix Larsen	15.11.2007
CH.	Jesper Sundberg	15.11.2007
AP.	Ole Brix Larsen	15.11.2007
AP.		

FIRST ANGLE PROJECTION

Thrane & Thrane
Telecommunications Engineering Copenhagen Denmark

TITLE
Assembly Instruction for
Mast Mount Kit 403742A-920

SIZE	CODEIDENT NO.	DRAWING NO
A3		TT97-126642
SCALE		SHEET 1 OF 1

41-121447 Rev.A